RANGER™ POOL LIFT

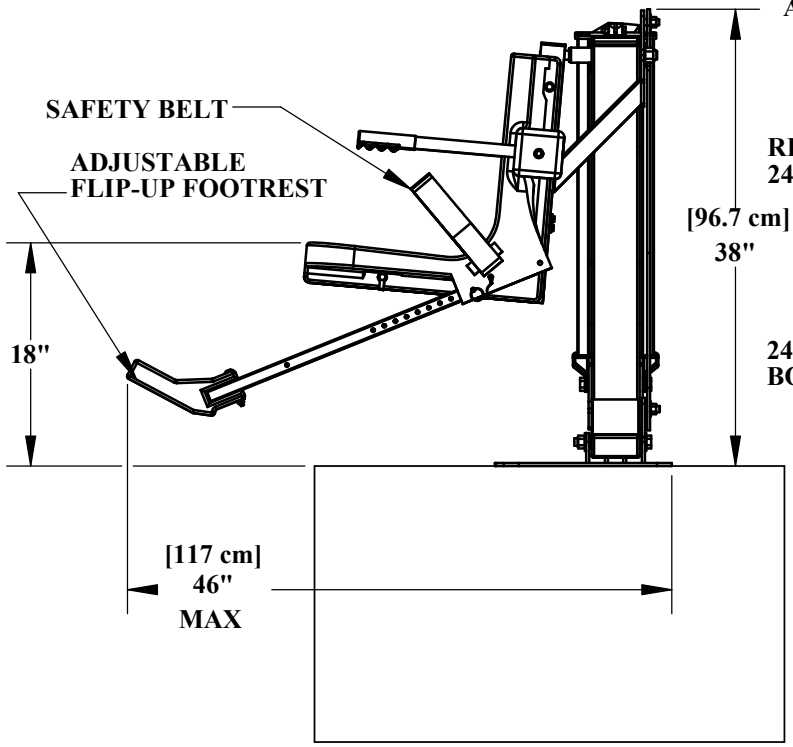

SIDE VIEW

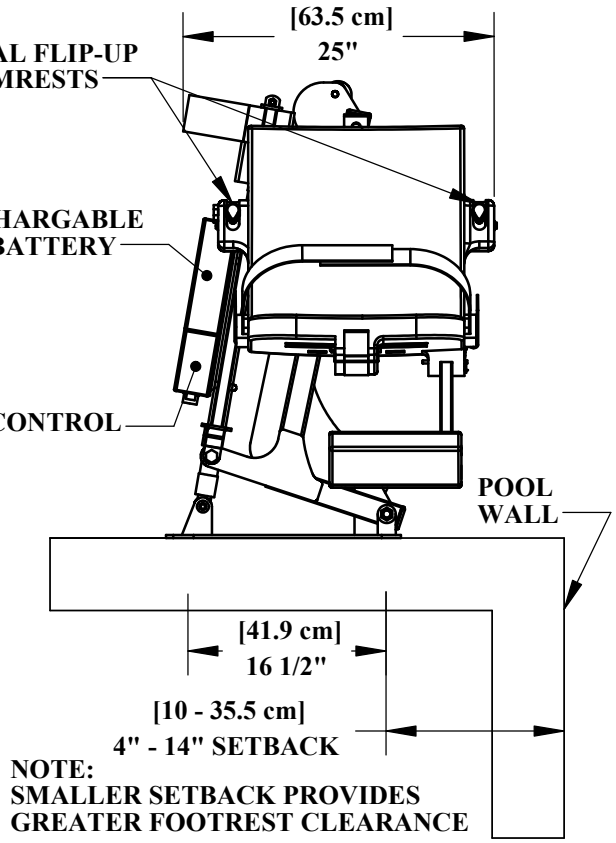

FRONT VIEW

SPECIFICATIONS

THE AQUA CREEK RANGER POOL LIFT SHALL BE A 24V LINEAR ACTUATED, SELF OPERABLE, IN-GROUND POOL OR SPA LIFT. THE LIFT SHALL NOT INTRUDE INTO THE POOL OR SPA UNLESS IN USE. THE LIFT SHALL BE OF STAINLESS STEEL CONSTRUCTION AND DESIGNED TO LIFT 300 LBS [136 kgs]. AN 18" [45.7 cm] WIDE SEAT SHALL BE CAPABLE OF BEING SET BACK 16" [405 mm] FROM CENTERLINE OF SEAT TO POOL EDGE. A 24 VOLT WATERPROOF CONTROLLER SHALL BE USABLE BY THE OPERATOR OR AN ATTENDANT. A CONTROL BOX, BATTERY CHARGER AND ONE REMOVABLE 24V RECHARGABLE BATTERY SHALL COME STANDARD. THE LIFT SHALL INCLUDE A SEATBELT. THE LIFT SHALL CARRY A FIVE YEAR WARRANTY ON ALL STRUCTURAL COMPONENTS.

BASE PLATE:	1/4" STAINLESS STEEL TYPE 304
MAIN HOUSING:	2" x 4" x .120" STAINLESS STEEL TUBE TYPE 304
CHAIR AND FOOTREST:	UV STABILIZED POLYETHEYLENE (LLDPE)
ACTUATOR:	24" STROKE LINAK LA34 LINEAR ACTUATOR
OPTIONAL WHEEL KIT:	MOLDED POLYOLEFIN
FINISH:	UV RESISTANT EPOXY POWDER COATING

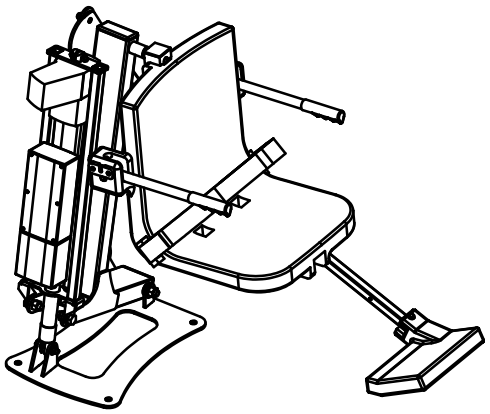

CE CERTIFIED

Aqua Creek Products
The Total Solution for Pool and Spa Access

9889 GARRY MORE LANE
MISSOULA, MT 59808
(406) 549-0769
FAX (406) 549-2602

NOTE:

*SPECIFICATIONS ARE SUBJECT TO CHANGE WITHOUT NOTICE
*ALL DIMENSIONS ARE IN INCHES

PRODUCT:	F-411RPL		
DWG #:	F-411RPL-1		
SCALE:	1:18	DATE:	3/24/10
DRAWN BY:	DS	REVISION:	A

RANGER™ POOL LIFT

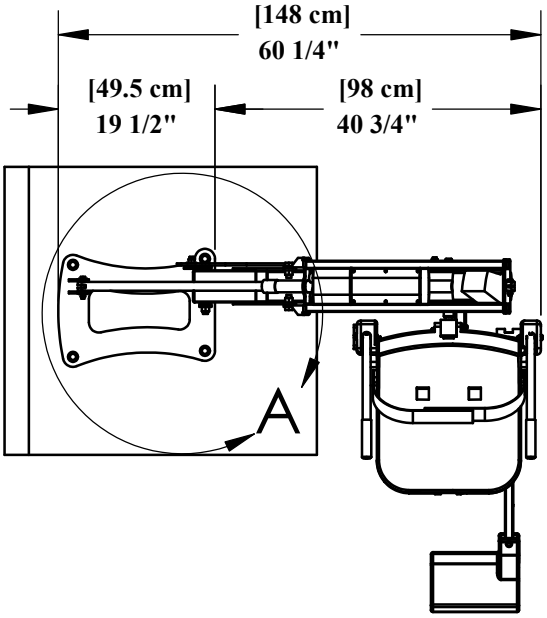

TOP VIEW

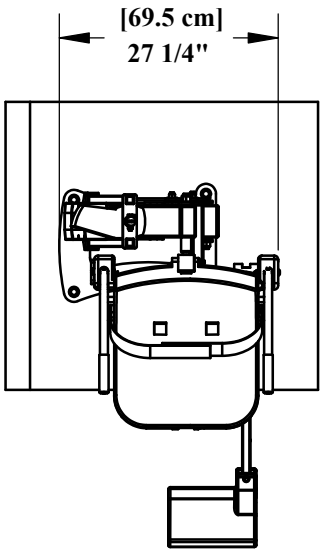

LIFT SHOWN IN FULLY RAISED POSITION

TOP VIEW

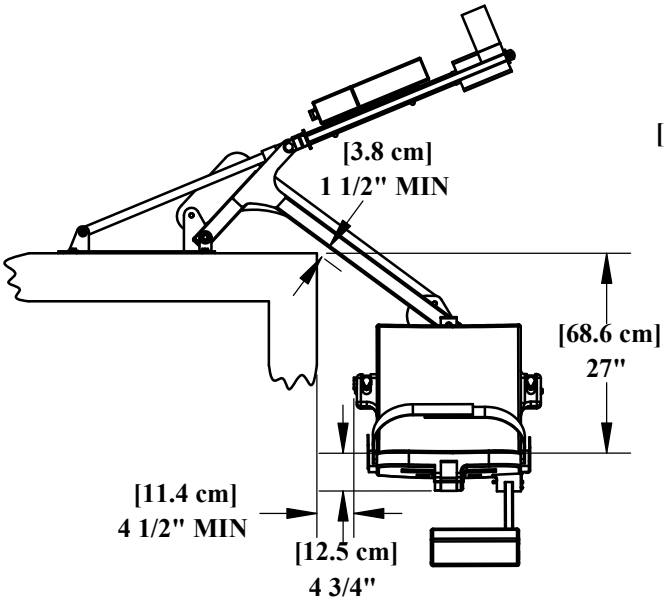

LIFT SHOWN IN FULLY LOWERED POSITION

FRONT VIEW

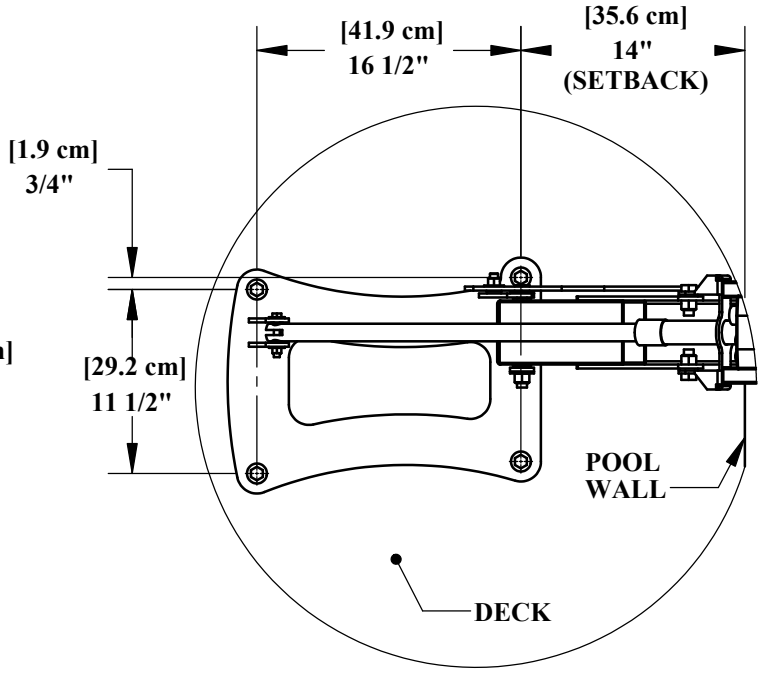

DETAIL A
SCALE 1 : 12

ANCHOR BOLT PATTERN

Aqua Creek Products
The Total Solution for Pool and Spa Access

9889 GARRY MORE LANE
MISSOULA, MT 59808
(406) 549-0769
FAX (406) 549-2602

NOTE:

*SPECIFICATIONS ARE SUBJECT TO CHANGE WITHOUT NOTICE
*ALL DIMENSIONS ARE IN INCHES

PRODUCT: F-411RPL	
DWG #: F-411RPL-2	
SCALE: 1:24	DATE: 3/24/10
DRAWN BY: DS	REVISION: A